JOHN ZINK
JOHN ZINK COMPANY LLC

Gordon-Piatt®

SZ, RZ & SRZ Series*

Instruction and Operation Manual

FOR GAS ONLY SYSTEMS

MANUFACTURED BY JOHN ZINK COMPANY, L.L.C.

WARNING!

BURNER MUST BE INSTALLED, MAINTAINED, AND OPERATED BY TRAINED PERSONNEL. DO NOT ATTEMPT TO OPERATE THE BURNER WITHOUT FIRST FAMILIARIZING YOURSELF WITH THESE OPERATING INSTRUCTIONS! IMPROPER INSTALLATION, OPERATION, OR MAINTENANCE OF THE EQUIPMENT MAY RESULT IN INJURY TO PERSONS, LOSS OF LIFE AND DAMAGE TO THE EQUIPMENT.

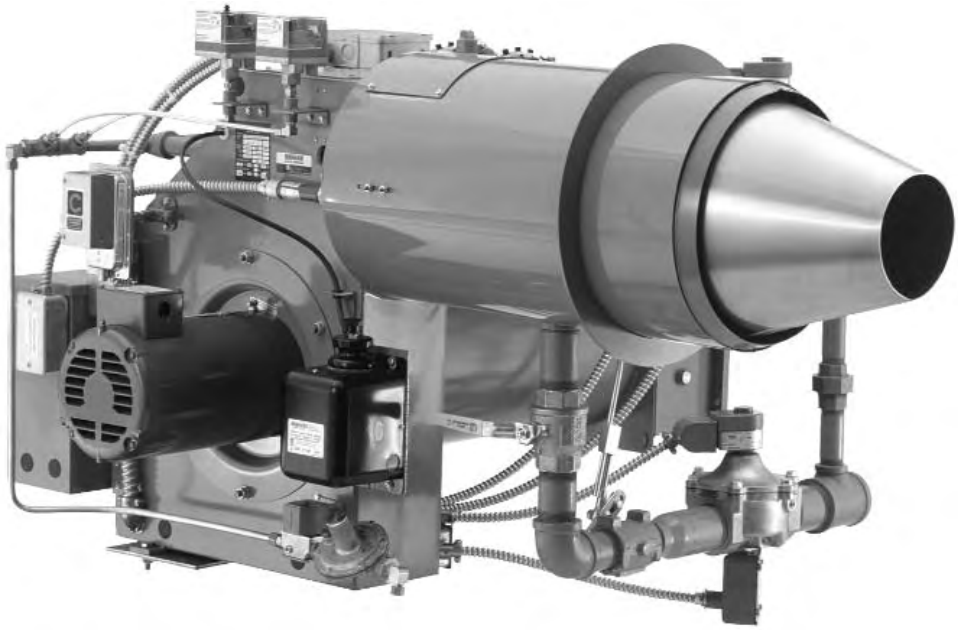

PRINCIPLES OF OPERATION

The Z® Series of combustion heads is designed to reduce NOx levels below 30 ppm corrected to 3% O_2 with little or no induced flue gas recirculation. The burner head is designed to entrain flue gases from the combustion chamber into the fuel and air prior to combustion, providing maximum reduction of peak flame temperatures and consequently NOx.

***Covered by one or more of the following patents:**
U.S. Patent Numbers 6565361; 4932274; 5441404; 5722821; 5944506; 5957682.

TABLE OF CONTENTS

PART I	**BURNER FAMILIARIZATION AND PRELIMINARY INSPECTION**	**3**
PART II	**INTRODUCTION**	**4**
PART III	**MINIMUM INSTALLATION INSPECTION CHECKLIST**	**5**
PART IV	**GAS PIPING INFORMATION AND BURNER GAS SYSTEMS DESCRIPTIONS**	**6**
	HZ-1 System (Figure 4-1)	7
	EZ System (Figure 4-2)	8
	EZ-1 System (Figure 4-3)	9
PART V	**INSTALLATION AND PARTS IDENTIFICATION**	**10**
PART VI	**COMBUSTION CONTROLS**	**10**
PART VII	**COMBUSTION SYSTEM ADJUSTMENTS**	**11**
	Burner Adjustments	11
	Air Flow and Gas Pressure Switch Adjustment	12
	Auxiliary Gas Pressure Switch Adjustment	12
	Diffuser and Ignitor Alignment (Figure 7-1)	13
	Mounting Dimensions (Figure 7-2)	13
PART VIII	**BURNER START-UP**	**14**
	Start-up Items Specific to Z Burners (Figure 8-1)	15
	Percent FGR vs. Windbox O_2 (Chart 8-2)	18
PART IX	**MAINTENANCE**	**19**

WARNING!

If you smell gas:

1. Open windows.
2. Don t touch electrical switches.
3. Extinguish any open flame.
4. EVACUATE people from building.
5. Immediately call the gas supplier from a neighbor s phone. Follow the gas supplier s instructions. If you cannot reach the gas supplier, call the fire department.

The use and storage of gasoline or other flammable liquids and vapors in open containers in the vicinity of this appliance is hazardous.

In accordance with OSHA standard 1910.147, all equipment, machines and processes shall be locked out prior to servicing.

If not installed, vented, operated and maintained in accordance with the manufacturer s instructions, this product could expose you to substances in fuel or from fuel combustion which can cause death or serious illness and which are known to the State of California to cause cancer, birth defects or other reproductive harm.

Improper servicing of this equipment may create a potential hazard to equipment and operators.

SERVICING MUST BE DONE ONLY BY FULLY TRAINED AND QUALIFIED PERSONNEL.

Before disconnecting or opening up a fuel line and before cleaning or replacing parts of any kind:

- Turn **OFF** the manual fuel shutoff valves including pilot gas cock, if applicable. If a multiple fuel burner, shut **OFF** all fuels.
- Turn **OFF** all electrical disconnects to the burner and any other equipment or systems electrically interlocked with the burner.

Do **NOT** use TEFLON¤ TAPE or compounds with TEFLON content as an oil or gas pipe sealant. TEFLON can cause valves to fail creating a SAFETY HAZARD. Warranties are nullified and liability rests solely with the installer when evidence of TEFLON is found.

PART I

BURNER FAMILIARIZATION AND EXTERNAL PARTS IDENTIFICATION

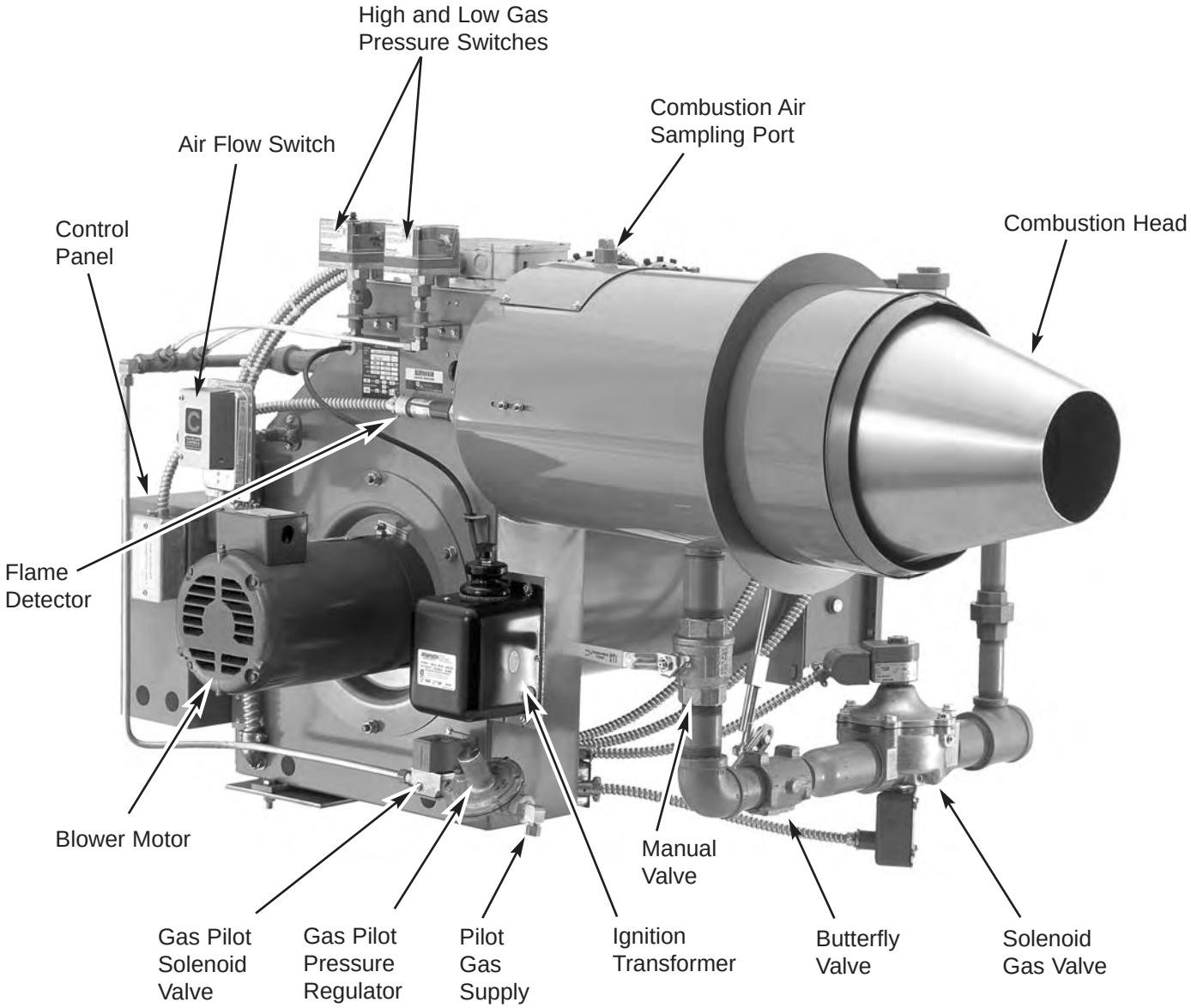

PRELIMINARY INSPECTION - The burner should be visually checked for damage and loose components as these conditions can occur during shipment, through improper handling, by tampering or through improper care and storage at the job site.

CHECK FOR:

- ❑ Obvious damage to housing, air inlet, and components mounted thereon.
- ❑ Tightness of fasteners, tube fittings, plugs, etc.
- ❑ Tightness of electrical terminals and connections.
- ❑ Tightness of adjustment mechanisms such as ball-joint swivel connectors and control arms.
- ❑ Accumulations of oil, dust, dirt, water or other foreign matter on, in or near the burner.

PART II

INTRODUCTION

NOTE

Installation requirements and instructions should always be covered in appropriate engineering drawings and specifications which detail the applicable building codes, etc. Information contained herein is to be used as a guide ONLY and not as the final authority.

- Starting a burner is an event that normally culminates from the efforts of several different contractors, manufacturers, utility and engineering concerns, sales and factory representatives, and others.
- In order for the burner to operate safely and meet its design capabilities, the interfacing fuel, air, electrical, exhaust and plant heating control systems must be properly sized, selected, installed and tested. Additionally, all conditions must be such that the heat generated by the burner can be safely used or wasted without endangering personnel or equipment.
- To insure that a safe and satisfactory installation has been made, a pre-start inspection is necessary. This inspection must be performed by an individual who is thoroughly familiar with all aspects of proper boiler/burner installation and how it interfaces with overall plant operation.
- Part I of this manual sets forth major inspection items that must be considered.
- The results of this inspection will often times identify corrections that must be made prior to start-up as well as point out potential or long range problems in plant operation if corrections are not made.
- Burner start-up is a serious matter and should not be viewed as a time for "crowd gathering" by unconcerned, uninformed or unauthorized personnel. The number of persons present should be held to an absolute minimum.
- Instruction of operating and other concerned personnel should be done after the burner has been successfully fired and adjusted by a qualified service agency or factory start-up specialist.

PART III

MINIMUM INSTALLATION INSPECTION CHECKLIST

GENERAL

NOTE

This inspection should be performed before the burner start-up specialist is called. An incomplete or inadequate installation may require additional time and effort by start-up personnel and cause an untimely and costly delay.

- ❑ Is burner installed in accordance with applicable installation drawings?
- ❑ If a refractory combustion chamber is part of the installation, is it completely dry, cured, and ready for firing at full boiler input?
- ❑ Has the proper electrical voltage been connected to the burner control cabinet as shown on the burner material list?
- ❑ Has the burner wiring been checked for completeness and accuracy? Have 3-phase motors been properly wired and checked for correct rotation?
- ❑ Are the boiler mounted limit controls such as low water cutoffs, high limit controls, operating controls, modulating controls, etc., properly installed and wired?
- ❑ Are the boiler controls the right type and range for the installation?
- ❑ Is the boiler water supply, including feed pumps, properly connected and is the boiler filled with water?
- ❑ Is sufficient load connected to the boiler so that it can be fired continuously at full rating?
- ❑ If boiler load is not connected, can steam be wasted so that the boiler can be fired continuously at full rating without endangering personnel or equipment?
- ❑ If the installation is a hot water boiler, have the circulating pumps been completely installed, wired, and tested to assure proper operation so that the burner can be fired continuously at full rating?
- ❑ For new boiler installations, has the boiler been boiled out in accordance with the boiler manufacturer's instructions?
- ❑ Have the boiler breaching connections to the stack been completed and are they open and unobstructed?
- ❑ Is draft control equipment required and, if so, installed?
- ❑ Have adequate provisions for combustion air been installed?
- ❑ Have the persons listed below been notified of the burner start-up date?
  - ❑ Owner's Representative
  - ❑ Mechanical Contractor's Representative
  - ❑ Electrical Contractor's Representative
  - ❑ Service Organization's Representative
  - ❑ Boiler Manufacturer's Representative
- ❑ Is all specified auxiliary equipment mounted and wired? This may include outdoor temperature controls, oil flow switches, space thermostats, water flow switches, motorized combustion air louvers, etc.

GAS FIRING

- ❑ Are all gas train components installed and have they been properly selected, sized and assembled?
- ❑ Have properly-sized vent lines been installed on all gas train components, which require venting? This includes such items as pressure regulators, normally open vent valves, diaphragm valves, low and high gas pressure switches, etc.
- ❑ Have gas train piping and components been tested and proven gas tight?
- ❑ Have the gas lines been purged?
- ❑ Is the proper gas pressure available at the inlet to the controls which meets the requirement shown on the burner material list?

SIGNATURE OF INSPECTOR(S)

Name: _____ Date:_____

Name: _____ Date:_____

Name: _____ Date:_____

PART IV

GAS PIPING INFORMATION AND BURNER GAS SYSTEMS DESCRIPTIONS

WARNING!

Do NOT use Teflon® tape as a gas pipe sealant. Teflon tape can cause valves to fail, creating a safety hazard. Warranties are nullified and liability rests solely with the installer when Teflon tape is used. Use a pipe joint compound rather than Teflon tape.

The gas control size and system furnished and the minimum gas pressure required at the inlet of the controls are shown in the Burner Material List contained in the manual shipped with the burner.

Gas piping should be sized to provide the required minimum pressure at the main manual shutoff when operated at maximum input. Consult your local utility on any questions regarding available gas pressure, piping pressure drops allowable, and local piping requirements.

Gas piping should be installed in accordance with the American National Standard, ANSI Z223.1 and any other local codes which may apply. All gas piping should be tested after installation with air pressure or inert gas for at least three times the gas pressure that will be used. The piping ahead of the main manual shutoff shall include a full size dirt pocket or trap.

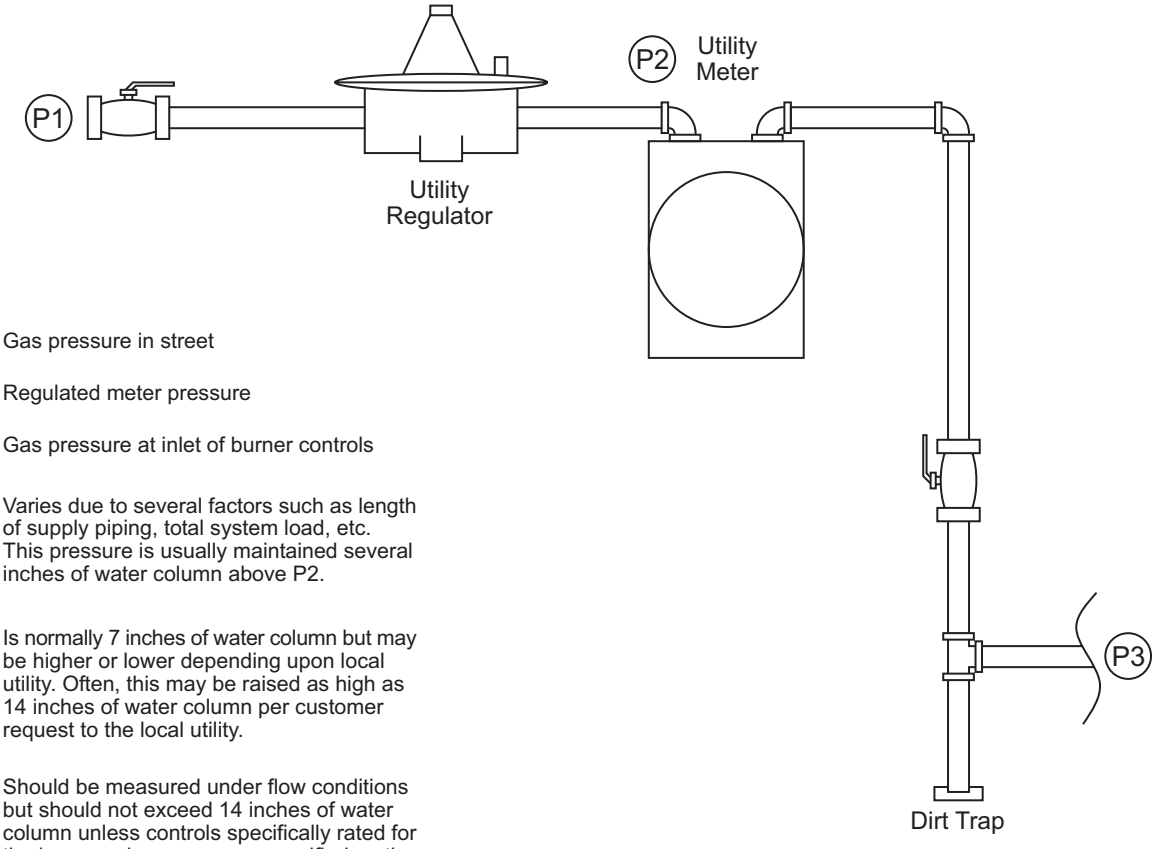

P1 Gas pressure in street

P2 Regulated meter pressure

P3 Gas pressure at inlet of burner controls

P1 Varies due to several factors such as length of supply piping, total system load, etc. This pressure is usually maintained several inches of water column above P2.

P2 Is normally 7 inches of water column but may be higher or lower depending upon local utility. Often, this may be raised as high as 14 inches of water column per customer request to the local utility.

P3 Should be measured under flow conditions but should not exceed 14 inches of water column unless controls specifically rated for the increased pressure are specified on the burner order.

HZ-1 GAS SYSTEM

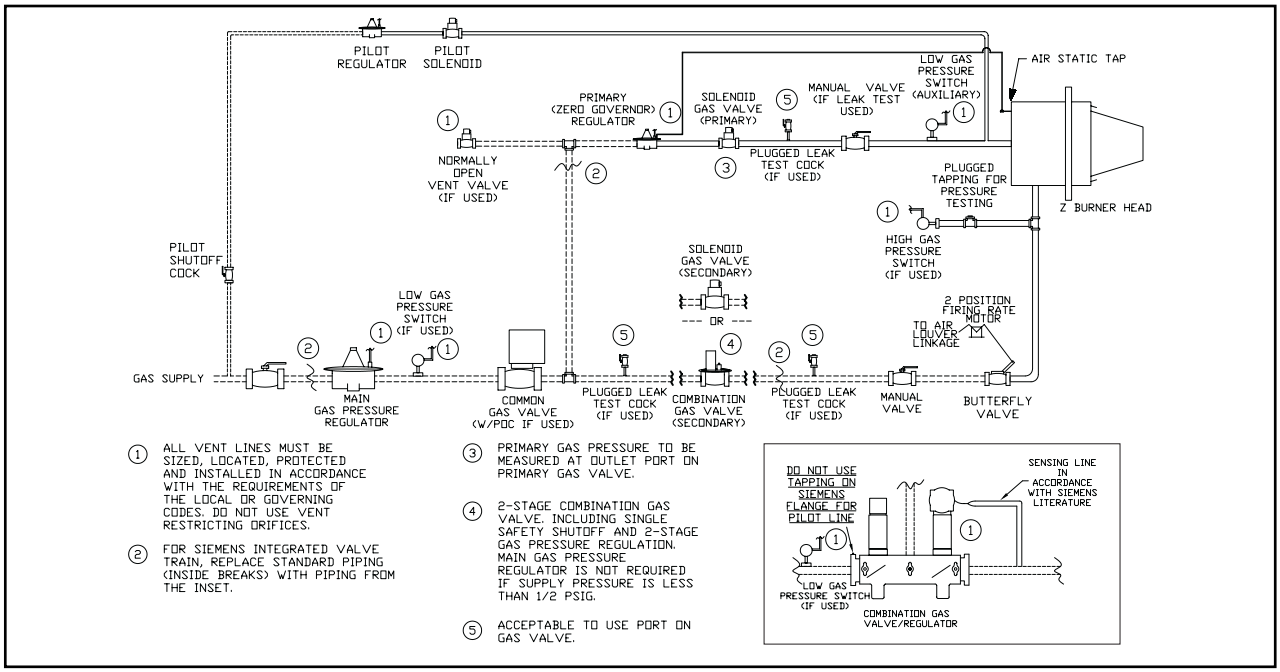

Figure 4-1 "HZ-1" Gas System Schematic

APPLICATION

The HZ-1 gas system is used for Z burners that utilize low-high-low combustion control systems. It is commonly used for Z burners between 1,250,000 Btu/hr and 2,000,000 Btu/hr firing rates. HZ gas systems are piloted systems when applied to Z Burners.

DESCRIPTION

The HZ-1 gas system uses primary and secondary gas trains. A common gas valve is located upstream of where the fuel train splits into primary and secondary fuel streams. The primary gas train consists of a shutoff valve and regulator. These two functions may be incorporated into a single device. The secondary gas train consists of a combination regulator/shutoff valve and a gas butterfly that is linked to the combustion air louver box or control motor. Gas pressure of both the primary and secondary fuel trains is adjusted and maintained by pressure regulators within the gas trains. If inlet pressure to the combination valves exceeds 14" w.c., a separate regulator must be supplied to reduce gas pressure below 14" w.c.

Alternatively, the combination regulator/shutoff valve in the secondary fuel train may be replaced with a single safety shutoff valve. In this case, a main gas regulator is required even if the gas supply pressure is less than 14" w.c.

OPERATING SEQUENCE

The burner motor starts on a call for heat by the operating control. Provided the system interlocks, including main low and high pressure switches, are satisfied, the pre-purge cycle occurs. Note that the auxiliary low gas pressure switch is not a system interlock. At the end of the pre-purge cycle, the ignition transformer and pilot gas valve are energized, lighting the pilot flame. The flame detector proves ignition of the pilot flame. The ignition transformer is de-energized. During the main flame establishing period, the common gas valve and the primary gas valve are energized, thus establishing primary flame. The pilot solenoid may be de-energized, depending upon the flame safeguard utilized. The first stage of the secondary gas valve is energized at the end of the main flame establishing period, provided that the auxiliary low gas pressure switch is closed. A latching relay is energized so that the opening of the auxiliary low gas pressure switch will not cause any gas valve to close. If the burner incorporates a two-stage combination regulator/shutoff valve in the secondary fuel train, the second stage of the secondary gas valve is energized after a time delay. The burner is then released to low-high-low operating mode.

EZ GAS SYSTEM

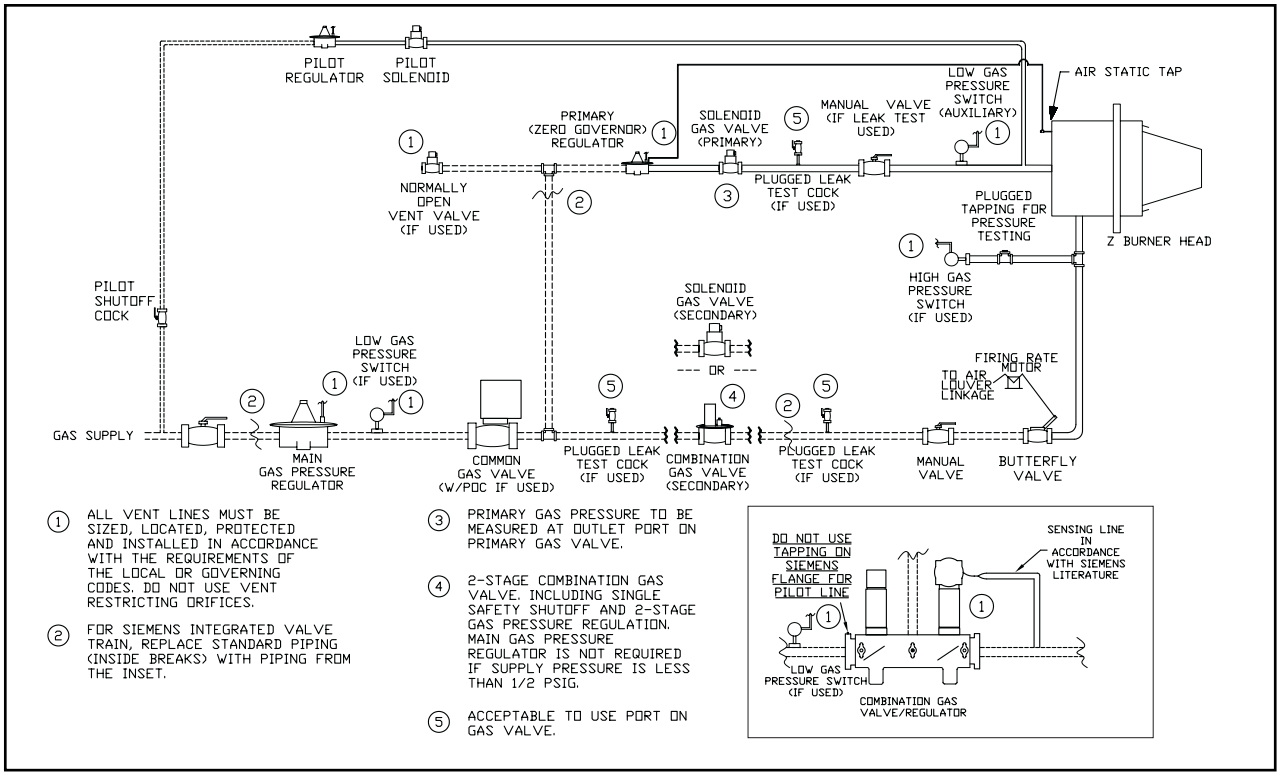

Figure 4-2 "EZ" Gas System Schematic

APPLICATION

The EZ gas system is used for Z burners that utilize modulating combustion control systems. It is commonly used for Z burners above 1,500,000 Btu/hr firing rates. EZ gas systems are piloted systems when applied to Z burners.

DESCRIPTION

The EZ gas system uses primary and secondary gas trains. A regulator and a common gas valve are located upstream of where the fuel train splits into primary and secondary fuel streams. The primary gas train consists of a solenoid valve and a regulator. The secondary gas train consists of a shutoff valve and a gas butterfly that is linked to the combustion air louver box or control motor. Gas pressure of both the primary and secondary fuel trains is adjusted and maintained by pressure regulators within the gas train.

OPERATING SEQUENCE

The burner motor starts on a call for heat by the operating control. Provided the system interlocks, including main low and high pressure switches, are satisfied, the pre-purge cycle occurs. Note that the auxiliary low gas pressure switch is not a system interlock. At the end of the pre-purge cycle, the ignition transformer and pilot gas valve are energized, lighting the pilot flame. The flame detector proves ignition of the pilot flame. The ignition transformer is de-energized. During the main flame establishing period, the common gas valve and the primary gas valves are energized, thus establishing primary flame. The pilot solenoid is de-energized. The secondary gas valve is energized at the end of the main flame establishing period, provided that the auxiliary low gas pressure switch is closed. A latching relay is energized so that the opening of the auxiliary low gas pressure switch will not cause any gas valve to close. If the burner incorporates a two-stage combination regulator/shutoff valve in the secondary fuel train, the second stage of the secondary gas valve is energized after a time delay. After a time delay, a control motor provides modulating firing rate control.

EZ-1 GAS SYSTEM

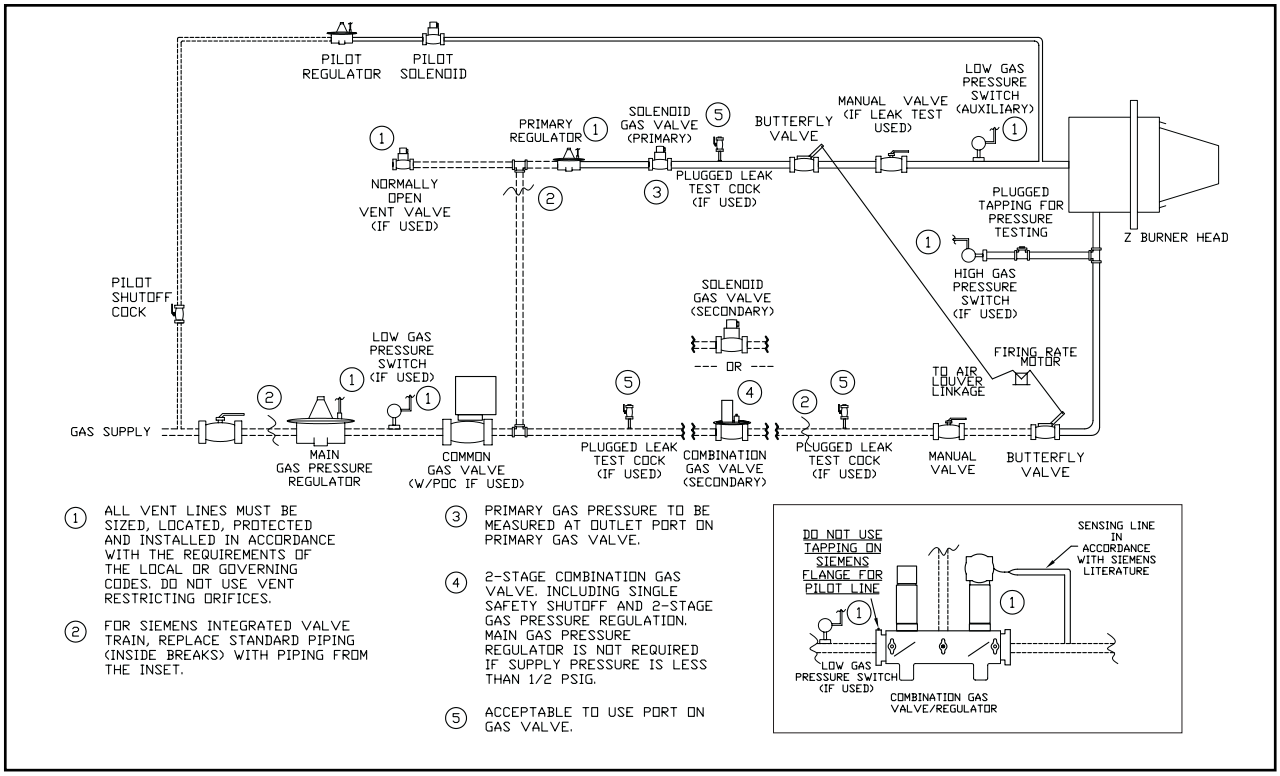

Figure 4-3 "EZ-1" Gas System Schematic

APPLICATION

The EZ-1 gas system is used for Z burners that utilize modulating combustion control systems. It is commonly used for Z burners above 1,500,000 Btu/hr firing rates. EZ-1 gas systems are piloted systems. When applied to Z burners.

DESCRIPTION

The EZ-1 gas system uses primary and secondary gas trains. A regulator and a common gas valve are located upstream of where the fuel train splits into primary and secondary fuel streams. The primary gas train consists of a solenoid valve, a regulator, and a gas butterfly valve that is linked to the control monitor. The secondary gas train consists of a shutoff valve and a gas butterfly that is linked to the combustion air louver box or control motor. Gas pressure of both the primary and secondary fuel trains is adjusted and maintained by pressure regulators within the gas train.

OPERATING SEQUENCE

The burner motor starts on a call for heat by the operating control. Provided the system interlocks, including main low and high pressure switches are satisfied, the pre-purge cycle occurs. Note that the auxiliary low gas pressure switch is not a system interlock. At the end of the pre-purge cycle, the ignition transformer and pilot gas valve are energized, lighting the pilot flame. The flame detector proves ignition of the pilot flame. The ignition transformer is de-energized. During the main flame establishing period, the common gas valve and the primary gas valves are energized, thus establishing primary flame. The pilot solenoid is de-energized. The secondary gas valve is energized at the end of the main flame establishing period, provided that the auxiliary low gas pressure switch is closed. A latching relay is energized so that opening of the auxiliary low gas pressure switch will not cause any gas valve to close. If the burner incorporates a two stage combination regulator/shutoff valve in the secondary fuel train, the second stage of the secondary gas valve is energized after a time delay. After a time delay, a control motor provides modulating firing rate control.

PART V

INSTALLATION AND PARTS IDENTIFICATION

The Z burner head must be positioned correctly within the firing chamber as shown in Figure 5-1. This is accomplished by specifying the front plate depth on the order. The burner mounting flange is welded to the combustion head at the factory to ensure proper combustion head penetration. For retrofit applications, it is preferable to replace the front plate if the front plate is tapered. The Z burner series can be used to fire firetube, firebox, watertube and cast iron boilers. Firetube boilers generally require a small amount of induced FGR (flue gas recirculation). For most other applications, the Z burner can achieve less than 30 ppm NOx at 3% O_2 without induced FGR, though maximum NOx reduction is achieved with about 10% induced FGR.

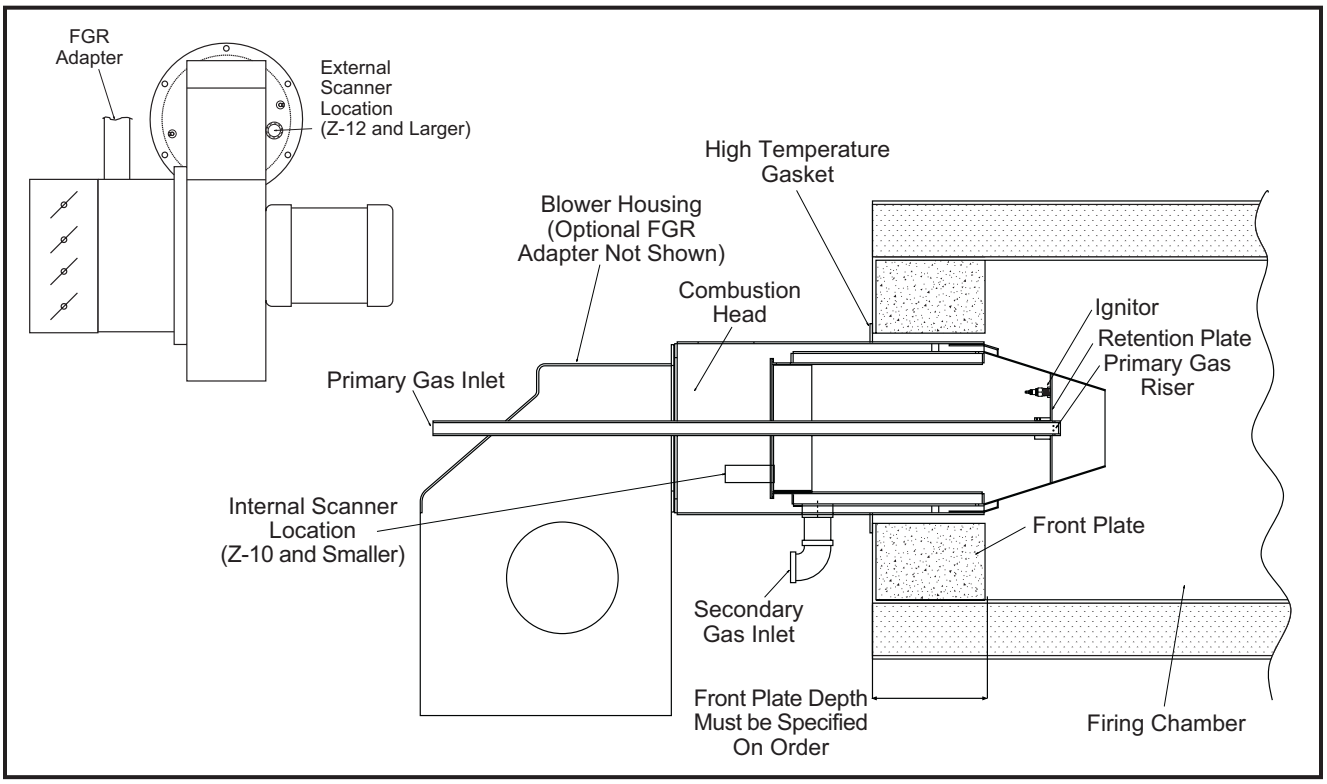

Figure 5-1

PART VI

COMBUSTION CONTROLS

Wiring diagrams and operating sequences are prepared for each INDIVIDUAL burner unit. These are furnished as part of the engineering documentation included as supplementary data to the instructions manual shipped with the burner.

GENERAL

Different control systems are available to satisfy different needs. For further information, consult the specific bulletin covering the flame safeguard used in your burner.

CAUTION

The Z burner utilizes operating sequences that are specific to Z burners. Review and fully understand the operating sequences described by your wiring diagram BEFORE COMMISSIONING the equipment.

PART VII

COMBUSTION SYSTEM ADJUSTMENTS

WARNING!

Be prepared to adjust the regulator as the burner is being test fired.

On initial start-up, the pressure at which the gas will be delivered to the burner cannot be determined without gas flowing through the regulator. On some Z burners, two-stage regulators are employed on the primary and/or secondary fuel portion of the gas train. There are two separate adjustments for the high and low pressure settings on the valve. See gas pressure regulator manufacturer's instructions for detailed procedures.

GAS PRESSURE REGULATOR ADJUSTMENTS

Z Model burners may utilize combination regulator/shut-off valves for either or both of the primary and secondary fuel flows. If the incoming fuel pressure to the combustion system is greater than 1/2 psig and the Z burner employs combination regulator/shutoff valves then a stepdown regulator is required. (See Figure 4-1).

NOTE

To adjust the regulator portion of the combination valve:

1. Remove the cap from the regulator portion of the valve to gain access to the adjustment screw.
2. Turn clockwise to increase outlet pressure or counter-clockwise to decrease fuel pressure.
3. Reinstall the cap.

BURNER ADJUSTMENTS

Adjustment of the burner may be required during start-up of the burner (reference Part VIII). Adjustments to fuel settings on the regulators and the overall air setting on the air inlet louver should be adjusted prior to fine tuning of the primary air shutter or primary air sleeve.

Refer to Figure 5-1 for primary air adjustments as well as scanner, ignitor and retention plate inspection and/or replacement.

FOR Z-12s

Primary air adjustment: loosen the set screws on the primary air sleeve locking collar and push in to increase primary air flow or pull back to decrease primary air flow.

Scanner access is external to the combustion head.

To access the spark ignitor and retention plate, first remove the access cover. Remove the four nuts that retain the primary air back plate. Slide the primary air back plate to the back of the combustion head. Break the union at the primary gas inlet as well as the pilot fittings. Slide the primary gas riser and retention plate back to the access cover opening. The ignitor and retention plate will now be accessible.

The retention plate or diffuser is either bolted to the primary gas manifold or attached to the gas riser itself with setscrews. Should the retention plate require replacement, align the gas ports such that they are 1/8" above the retention plate as shown in Figure 7-1. The diffuser should be oriented such that a gas port is directed at the spark ignitor as shown in Figure 7-1.

Upon re-assembly of the burner, it is important that the diffuser seats against the outer cone as shown in Figure 7-1. The scanner is aligned opposite the spark ignitor as shown in Figure 5-1.

FOR Z-10s

Once the access cover is removed, the scanner and primary air shutter are accessible.

Primary air adjustment: Adjustment of the primary air shutter can be accomplished by loosening the setscrew on the shutter assembly and rotating the shutter to decrease or increase the amount of primary air.

To access the spark ignitor and retention plate, first remove the access cover. Remove the four nuts that retain the primary air back plate. Break the union at the primary gas inlet as well as the pilot fittings. Slide the primary air back plate to the back of the combustion head. Slide the primary gas riser and retention plate back to the access cover opening. The ignitor and retention plate will now be accessible.

The retention plate or diffuser is either bolted to the primary gas manifold or attached to the gas riser itself with setscrews. Should the retention plate require replacement, align the gas ports such that they are 1/8" above the retention plate as shown in Figure 7-1. The diffuser should be oriented such that a gas port is directed at the spark ignitor as shown in Figure 7-1.

Upon re-assembly of the burner, it is important that the diffuser seats against the outer cone as shown in Figure 7-1. The scanner is aligned opposite the spark ignitor as shown in Figure 5-1.

FOR Z-8s

To access the scanner, retention plate and primary air shutter, the primary gas riser must be removed. To accomplish this, the gas piping leading to the primary riser must be broken at the nearest union. Also, the ignition cable and/or the scanner wires may have to be disconnected at the ignition transformer and control panel to allow for removal of the primary gas riser. Be sure to label any component or wires removed from the burner to facilitate re-assembly. Once the required piping has been disassembled, remove the bolts attaching the removable burner backplate. Remove the backplate and primary gas riser as one assembly. Both the ignitor and the scanner are threaded connections. The retention plate or diffuser is either bolted to the primary gas manifold or attached to the gas riser itself with setscrews. Should the retention plate require replacement, align the gas ports such that they are 1/8" above the retention plate as shown in Figure 7-1. The diffuser should be oriented such that a gas port is directed at the spark ignitor as shown in Figure 7-1.

Adjustment of the primary air shutter can be accomplished by loosening the setscrew on the shutter assembly and rotating the shutter to decrease or increase the amount of primary air. The shutter assembly is held in place against the manifold by a spring that is compressed when the backplate is installed.

Upon re-assembly of the burner, it is important that the diffuser seats against the outer cone as shown in Figure 7-1. The scanner is aligned opposite the spark ignitor as shown in Figure 5-1.

AIR FLOW SWITCH ADJUSTMENT

DESCRIPTION

The airflow switch is used to prove the flow of combustion air from the blower assembly. It causes the fuel valve to close or fail to open upon loss of or inadequate combustion air.

ADJUSTMENT PROCEDURE

1. Switches should be set to break (open) when combustion air is substantially reduced.
2. If applicable, remove cover to adjusting screw.
3. Turn adjusting screw clockwise to increase set point or counter-clockwise to decrease set point.

GAS PRESSURE SWITCH ADJUSTMENT

FOR HIGH AND LOW GAS PRESSURE SWITCHES:

DESCRIPTION

Gas pressure switches are pressure actuated electrical switching devices designed for safety shutoff when gas pressures are either too low or too high. The pressure switch senses any change in gas pressure and, if properly adjusted, will transmit an electrical signal to the automatic shutoff valve and/or other interlocking devices when an unsafe condition exists. The burner will then recycle or completely shut down depending upon the flame safeguard used. Gas pressure switches are designed to operate over a specified pressure range; therefore, each switch must be selected to be compatible with the burner operating gas pressure and also to obtain the desired electrical features.

ADJUSTMENT PROCEDURE

For Initial Start-Up:

1. Low gas pressure switch - adjust to a lower pressure than that to be experienced for normal operation to allow the burner to be set up.
2. High gas pressure switch - adjust to a higher pressure than that to be experienced for normal operation to allow the burner to be set up.

For Auxiliary Low Gas Pressure Switch:

The auxiliary low gas pressure switch is adjusted in the same manner as the high and low gas pressure switches. The auxiliary low gas pressure switch is intended to insure that sufficient pressure is applied to the primary zone of the Z Burner prior to the initiation of the secondary fuel flow. Once the secondary fuel flow is permitted to initiate, the auxiliary low gas pressure switch is latched within the control circuit such that opening of the auxiliary low gas pressure switch will no longer shut down any fuel valves.

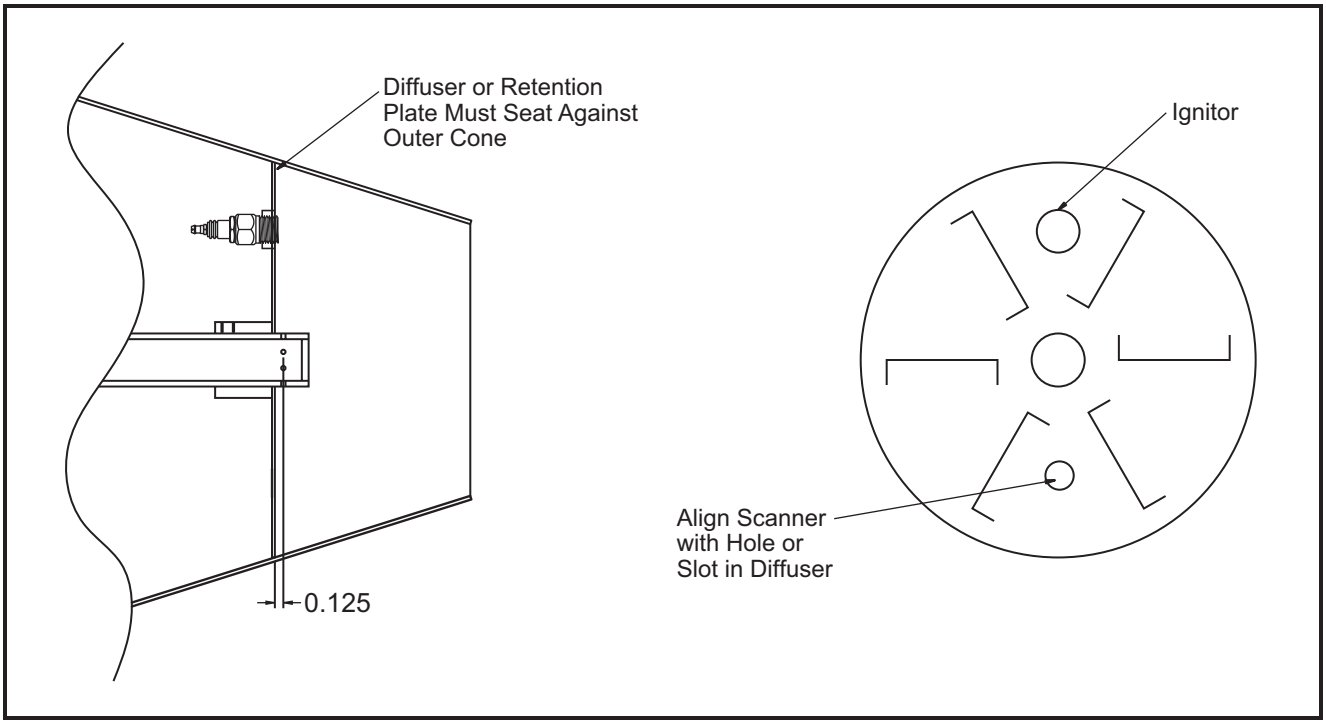

Figure 7-1 Diffuser and Ignitor Alignment

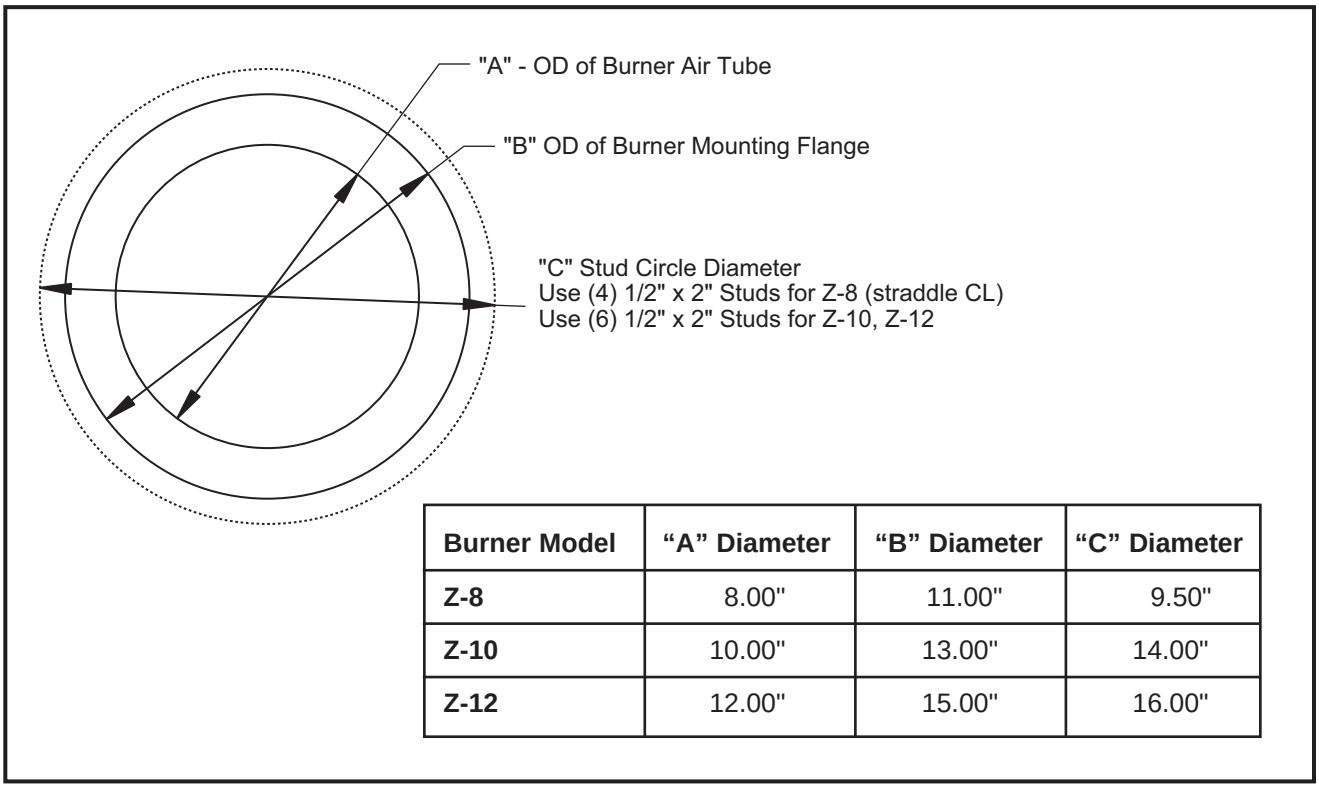

Burner Model	“A” Diameter	“B” Diameter	“C” Diameter
Z-8	8.00"	11.00"	9.50"
Z-10	10.00"	13.00"	14.00"
Z-12	12.00"	15.00"	16.00"

Figure 7-2 Mounting Dimensions

PART VIII

BURNER START-UP

WARNING!

If you smell gas:

1. Open windows.
2. Don't touch electrical switches.
3. Extinguish any open flame.
4. EVACUATE people from building.
5. Immediately call the gas supplier from a neighbor's phone. Follow the gas supplier's instructions. If you cannot reach the gas supplier, call the fire department.

This manual has been prepared as a guide in burner start-up and commissioning. It is intended for the start-up specialist who is thoroughly qualified by both training and experience.

This manual is UNIQUE in that it contains material SPECIFIC TO YOUR BURNER. Replacement costs are significant. Handle this manual with care and maintain it in a clean, dry environment.

WARNING!

Do not proceed with start-up unless all applicable checklist items in Part III have been completed and preliminary adjustments from Part VII have been accomplished.

Be certain that the combustion chamber, flues, and surrounding areas are free of GAS or flammable vapor accumulation. FLAMMABLE VAPORS CAN ACCUMULATE FROM OIL, OIL VAPOR, PAINT THINNERS, CLEANING SOLUTIONS, GASOLINE, ETC. - An explosimeter [Mine Safety Appliances Co. Model No. 2A or equivalent] should be used to make this determination.

During initial start-up, the operator must be on constant alert for emergency conditions such as fuel leaks, electrical malfunctions, etc. The location of all manual shutoff valves and switches should be clearly in mind so that the burner can be quickly shut down if necessary.

WARNING!

Should the burner fail to ignite, never manually manipulate or bypass the flame safeguard sequence, which provides for purging of the combustion chamber.

1. **GENERAL -** The following data is pertinent to the burner start-up and should be carefully studied before any attempt to operate the burner is made. This material is part of the manual shipped with the burner.
   - Burner Material List
   - Burner Wiring Diagram and Operating Sequence
   - Flame Safeguard Bulletin
   - Gas System Bulletin
   - Miscellaneous Manufacturers' Data on Controls, Valves, Regulators, etc.
2. **FLAME SAFEGUARD INSTALLATION -** Assure that the flame safeguard is properly installed in the sub-base. The burner flame safeguard is often packaged and shipped in a separate carton; however, the control cabinet or panel will always contain the mounting sub-base, which is pre-installed and pre-wired at the factory. See separate instructions on the flame safeguard for mounting the unit in the sub-base.
3. **IDENTIFICATION OF CONTROLS -** Review the burner wiring diagram.

CAUTION

The Z burner utilizes operating sequences that are specific to Z burners. Review and fully understand the operating sequences described by your wiring diagram BEFORE PROCEEDING WITH COMMISSIONING of the equipment.

4. **REVIEW BURNER MATERIAL LIST -** The material list in the instruction manual contains the following information, which should be available for start-up:
   - Firing Rate [MBTU/Hr]
   - Gas Flow [Cubic Feet of Gas per Hour or CFH]

- Heating Value of Gas [Btu per Cubic Foot or Btu/ft^3]
- Required Gas Pressure at Control Inlet [in. w.c.]
- Required Gas Pressure at Primary and Secondary Burner Manifolds [in. w.c.]

5. Using the manufacturer's bulletin on the FLAME SAFEGUARD, proceed with all checkout items that can be accomplished without establishing flame in the boiler.

START-UP ITEMS SPECIFIC TO Z BURNERS

CAUTION

The Z Burner requires set-up and adjustment procedures that are specific to Z Burners. Review and understand these requirements carefully and completely before proceeding.

WARNING!

Never try to operate a Z Burner with the primary manual shutoff closed and the secondary manual shutoff open.

Figure 8-1

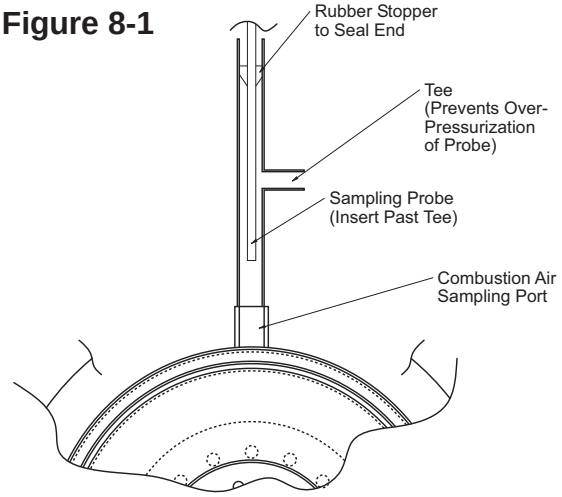

TEST EQUIPMENT:

Z burners should only be commissioned with a calibrated combustion analyzer, which includes the capability of measuring NOx accurately below 30 ppm or your emissions limit, whichever is lower. An additional O_2 meter calibrated above 18% O_2 is helpful when the burner incorporates induced FGR.

Manometers are also required to set up the burner. Full operating data (Reference Form 1528) should be recorded at each operating point.

If the burner utilizes induced FGR, the establishment of primary flame should occur with the induced FGR valve in the closed position. For systems with FGR, combustion air O_2 level is required to determine the amount of induced FGR. To sample the combustion O_2 level, prepare a sample tube as shown in Figure 8-1. Thread the tube into the air pressure test connection on the burner.

Up to this point, the shutoff cocks leading to both the primary and secondary fuel manifolds are closed. The "Burner On" switch should be in the "off" position. Familiarize yourself with the entire start-up procedure, the location of primary and secondary shutoff valves and manual gas cocks, and primary and secondary control valves/regulators. (Some Z burners employ devices in the fuel trains that incorporate shutoff and regulator functions in a single device.) The primary gas enters through the center of the back plate of the burner. The secondary fuel enters through the side of the combustion head, most often at the bottom (refer to Figure 5-1). Manometers should be installed to measure both primary and secondary fuel pressure as well as chamber pressure.

NOTE

Suggested initial settings can be found on the order entry form within your burner manual. Variable field conditions due to stacking and breaching, application of induced FGR, and short-circuiting of flue gases within the boiler may require that the burner settings deviate from those listed. In all cases, only O_2, CO_2, CO, and NOx readings from a calibrated combustion analyzer should be relied upon during the commissioning process.

START-UP ITEMS SPECIFIC TO Z BURNERS

ESTABLISHING PRIMARY FLAME FOR BURNER

1) Check that the air louver box is set to the low fire setting. The FGR damper, if included, should be detached from the linkage arm and remain in the "closed" position.

2) With the manual valves to both the primary and secondary fuel feeds closed, turn the "Burner On" switch to the "on" position. Assuming the applicable boiler and gas train interlocks are satisfied, the combustion air blower will start. Check that the inlet air louver is set such that the air pressure matches the suggested initial settings corresponding to the applicable boiler model and firing rate. After setting the inlet air louver, turn the "Burner On" switch to the "off" position.

3) Open the manual shutoff cock in the fuel line leading to the PRIMARY gas inlet. The manual shutoff cock to the secondary burner manifold should remain closed.

4) Re-start the burner by powering the panel and by turning the "Burner On" switch to the "on" position.

5) Allow the burner control to establish main flame and enter "Run" mode. At this point, the pilot solenoid will de-energize. Preliminarily adjust the primary gas flow with the primary gas control valve so that the fuel pressure matches that of the suggested initial settings at the low fire position. At this point the auxiliary low gas pressure switch should be set at least one inch water column less than the primary fuel gas pressure. During final commissioning the auxiliary low gas pressure switch setting will be raised closer to the actual primary gas pressure.

6) With the secondary manual shutoff cock closed, stroke the burner to high fire with the manual potentiometer. Set the main regulator and primary gas valve such that the fuel pressure of the primary manifold is set to the suggested initial settings at the high fire position. The O_2 level of the flue gases in the stack should be between approximately 18.5% and 20% O_2 when operated with primary fuel ONLY.

7) Return the burner to low fire and reset the low fire primary gas pressure with the primary gas control valve.

8) Still with the secondary manual shutoff valve closed, cycle the burner from low to high several times.

9) If the recommended sight port is installed in the firing chamber, check that the primary flame exits the combustion head and remains attached to the retention plate. If the primary flame is too short, either adding primary fuel or closing the primary air shutter will lengthen the flame. If the primary flame is long and pulling away from the retention plate, removing primary fuel or opening the primary air shutter will provide additional retention.

ESTABLISHING SECONDARY FLAME FOR BURNERS WITHOUT INDUCED FGR:

1) Turn the "Burner On" switch to the "off" position.

2) Determine secondary fuel pressure required at low fire from the suggested initial settings.

3) Open the secondary manual gas cock.

4) Turn the "Burner On" switch to the "on" position to establish a call for heat.

5) Allow the burner to establish main flame and enter the "Run" mode. Upon entering the "Run" mode, the secondary fuel valve opens and supplies fuel to the secondary manifold. Typically, the O_2 level in the stack should read between 4.0% O_2 and 9.0% O_2 at low fire with CO less than 100 ppm.

NOTE

For burners utilizing a 2-stage combination regulator/shutoff valve on secondary fuel train: Set the first stage of the secondary combination valve such that the O_2 level in the stack is between 5% O_2 and 9% O_2 and the secondary fuel engages smoothly. After a time delay, the second stage of the secondary fuel valve is enabled, resulting in O_2 levels typically between 4% O_2 and 8% O_2 at low fire.

6) Increase the firing rate. Maintain O_2 levels in the stack between 3% O_2 and 8% O_2, with the O_2 level decreasing with an increase in firing rate. The O_2 level at high fire should be between 3% O_2 and 6% O_2.

START-UP ITEMS SPECIFIC TO Z BURNERS

NOTE

Suggested initial settings can be found on the order entry form within your burner manual. Variable field conditions due to stacking and breaching, application of induced FGR, and short-circuiting of flue gases within the boiler may require that the burner settings deviate from those listed. In all cases, only O_2, CO_2, CO, and NOx readings from a calibrated combustion analyzer should be relied upon during the commissioning process.

ESTABLISHING SECONDARY FLAME FOR BURNERS WITH INDUCED FGR:

After accomplishing the procedure to establish primary flame (steps 1-9 from Establishing Primary Flame for All Burners):

1) **The FGR damper should be detached from the linkage arm and remain in the "closed" postition until Step (6).** Turn the "Burner On" switch to the "off" position.

2) Determine secondary fuel pressure required at low fire from the suggested initial settings.

3) Open the secondary manual gas cock.

4) Place the "Burner On" switch in the "on" position to establish a call for heat.

5) Allow the burner to establish main flame and enter the "Run" mode. Upon entering the "Run" mode, the secondary fuel valve opens and supplies fuel to the secondary manifold. Typically, the O_2 level in the stack should read between 6% and 10% O_2 with CO less than 100 ppm.

NOTE

For burners utilizing a 2-stage combination regulator/shutoff valve on secondary fuel train: Set the first stage of the secondary combination valve such that the O_2 level in the stack is between 6% O_2 and 10% O_2 and the secondary fuel engages smoothly. After a time delay, the second stage of the secondary fuel valve is enabled, resulting in O_2 levels typically between 6% O_2 and 10% O_2 at low fire.

6) While monitoring the stack combustion analyzer and combustion air O_2 level, slowly crack open the induced FGR damper. The combustion air O_2 level with induced FGR will typically stay above 19%, indicating about 10% induced FGR. (See Chart 8-2). As FGR is induced into the combustion airstream, it will displace fresh air resulting in decreased O_2 level in the stack. The resulting O_2 level in the stack should fall to between 4% and 7%. FGR levels above15% (O_2 levels in the combustion airstream below 18.5%) are rarely required to achieve maximum NOx reduction.

7) Note and/or mark the position of the flue gas damper that corresponds to a level of NOx below the permitted level at low fire and shut the burner off by turning the "Burner On" switch to the "off" position.

8) Shut the manual gas cock in the secondary fuel line.

9) Re-connect the FGR damper linkage such that the low fire setting of the FGR damper is set to the position noted in Step (7).

10) Re-start the burner with the manual gas cock in the secondary fuel line closed.

11) Cycle the burner to high fire and set the stroke of the FGR valve to approximately 1/2 open at high fire.

12) Shut off the burner by turning the “Burner On” switch to the "off" position.

13) With the burner off, open the manual gas cock in the secondary fuel line.

14) Turn the "Burner On" switch to the "on" position and cycle the burner. Re-check combustion data at low fire and repeat steps 7-13 as necessary.

15) Using the manual potentiometer or high fire contact on low-high-low systems, increase the firing rate. Maintain O_2 levels in the stack between 3% and 6%, with the O_2 level decreasing with an increase in firing rate. The O_2 level at high fire should be between 3% O_2 and 5% O_2. FGR rates throughout the firing range will normally stay below 10%–15% FGR, or combustion O_2 levels above 18.5% O_2. Adjust high fire FGR valve to obtain permitted level of NOx.

16) Repeat steps 7-10 and 12-15 as necessary.

START-UP ITEMS SPECIFIC TO Z BURNERS

FINAL COMMISSIONING FOR BURNER

1) Full operating data (Reference Form 1528) should be recorded at each operating point.

2) Finish all checkout items in the manufacturer's instructions bulletin on the FLAME SAFEGUARD that requires the burner to be operational, i.e. the burner to be "on." This includes checking the high gas pressure switch.

3) With the burner off and the manual gas cock leading to the secondary fuel gas line closed, set the auxiliary low gas pressure switch within 0.3 inches water column of the operational primary gas setting.

4) Turn the "Burner On" switch to the "on" position and establish primary flame only. Lower the primary gas pressure to the auxiliary low gas pressure setting (confirm with volt meter).

5) Turn the "Burner On" switch to "off" position.

6) Open the manual gas cock leading to the secondary fuel gas.

7) Re-start the burner by placing the "Burner On" switch in the "on" position. If the secondary fuel gas valves do not open after the burner enters the "Run" mode, verify that the auxiliary low gas pressure switch is broken or "not made." Lower the auxiliary gas pressure switch setting slowly until the secondary fuel gas valves open. The burner should be fully operational at this reduced primary fuel gas pressure.

8) Increase the primary fuel pressure back to the commissioned setting recorded in Step 1 of Final Commissioning.

9) Measure motor running current after final adjustments have been made. Current should not exceed the service factor amps listed on the motor nameplate.

10) Check control voltage on terminals 1 and 2 as the motor starts. Voltage should not fall below 102 volts, even momentarily. Low voltage can cause difficulty in control operation. Extreme voltage drop indicates inadequate service wire size to the burner.

11) Check all interlocks, including low water cutoff and high temperature limit, for proper operation. Using the burner operating sequence, verify that each burner or control function occurs at the timing indicated.

NOTE

Suggested initial settings can be found on the order entry form within your burner manual. Variable field conditions due to stacking and breaching, application of induced FGR, and short-circuiting of flue gases within the boiler may require that the burner settings deviate from those listed. In all cases, only O_2, CO_2, CO, and NOx readings from a calibrated combustion analyzer should be relied upon during the commissioning process.

Chart 8-2
Percent FGR vs Windbox O_2

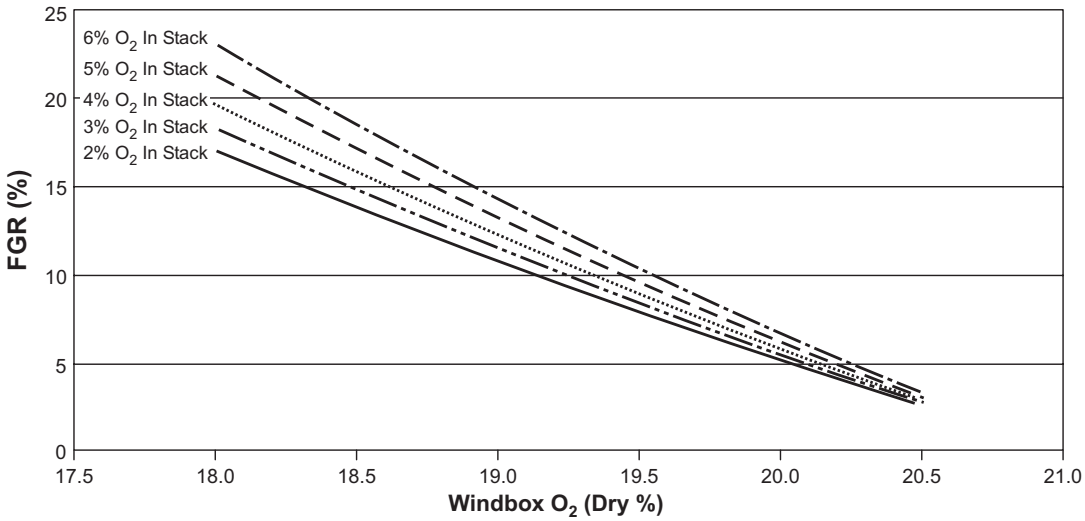

PART IX
MAINTENANCE

NOTE

After the burner has been started and adjusted by your installer, linkage settings, fuel pressures and control settings should not be changed or tampered with by persons not thoroughly experienced with the burner and control system.

GENERAL MAINTENANCE

1. Keep the boiler, burner and entire boiler room clean. A clean boiler room is essential to first class boiler operation.
2. Keep the burner and boiler control covers in place. The electrical contacts in the controls are very sensitive to dust and dirt.
3. Never close vents supplying air to the boiler room. If cold air currents cause difficulty with other boiler room equipment, air ducts should be installed to direct the flow of fresh air.
4. Repair all leaks promptly. All piping connections should be maintained leak-proof because even a minor leak, if neglected, may soon become serious.
5. Foaming or priming may occur in a steam boiler and cause large quantities of water to pass over into the steam main. It can be detected by violent fluctuations or sudden dropping of the water level in the glass. This will result in nuisance shutdowns of the burner due to the sudden dropping of the water level causing the low water cutoff to shut off the burner.

   This trouble may be caused by dirt or oil in the boiler water, an overdose of boiler compounds, or carrying too high an overload on the boiler. In case of serious trouble, stop the burner and decrease the load on the boiler. Then correct the condition according to the boiler manufacturer's instructions.

DAILY MAINTENANCE

1. Check boiler water level in the sight glass and the steam pressure on the gauge to the steam boilers. Check temperature reading and water pressure on hot water boilers.
2. Check the low water cutoff operation by opening the blow down valve on the low water cutoff to remove rust and dirt and determine that the burner cuts out with low water in the sight glass.

WARNING!

Immediate corrective action must be taken if burner does not cut off with low water in the sight glass.

3. Turn off burner control switch. Turn on burner control switch and determine that burner flame safeguard locks out on flame failure before the main gas valve is energized.

WARNING!

Immediate corrective action must be taken if flame safeguard does not lock out to indicate flame failure.

4. Observe the operation of the boiler limit and operating controls to determine that the burner is being cut off at the proper setting. Adjust per the manufacturer's instruction sheet as required.

WEEKLY MAINTENANCE

1. Check all burner linkages. Tighten if necessary.
2. Test the low water cutoff by opening the boiler blow down valve to remove rust and dirt from the boiler mud leg or drum and determine that the burner cuts off when low water point is reached in the sight glass.
3. Check all phases of the operation of the control circuit for proper operation.
4. Operate burner manual shutoff valves to determine that they are working freely and properly. Lubricate if necessary.
5. Perform all tests and inspections required under "Daily Maintenance."

MONTHLY MAINTENANCE

1. Check air dampers for smooth operation. Remove accumulation of lint or dirt.
2. Test boiler safety valve.
3. Lubricate motors in accordance with motor manufacturer's instructions.
4. Perform all tests and inspections required under "Weekly Maintenance."

ANNUAL MAINTENANCE

1. Have the burner inspected and checked by a qualified service representative.
2. If the boiler is to be out of service for the summer close all manual valves. Turn off burner by control switch, being sure to leave electrical power on the control panel. Leaving power on the control panel will prevent humidity damage to the flame safeguard.
3. The ignition electrode and primary diffuser should be inspected and cleaned if necessary.
   - The high tension wire between the transformer and the ignition electrode should be checked for deterioration.
   - The flame scanner should be inspected and cleaned if necessary.

PERIODIC TESTING RECOMMENDED CHECKLIST

ITEM	FREQUENCY	ACCOMPLISHED	REMARKS
Check burner and boiler control linkage	Daily	Operator	Make visual inspection
Check fuel system for leaks	Daily	Operator	Make inspection visually and with leak detection instrument
Gauges, monitors and indicators	Daily	Operator	Log readings
Instrument and equipment settings	Daily	Operator	Inspect and check against recommended specifications
Check burner flame	Daily	Operator	Make visual inspection for changes in flame
Firing rate control	Weekly Semi-annually Annually	Operator Service Technician Service Technician	Verify factory settings Verify factory settings Check with analyzer
Stack temperature	Daily	Operator	Log readings
Flue, vent, stack, and outlet dampers	Monthly	Operator	Inspect linkage and check operation
Ignitor	Annually	Service Technician	Make visual inspection
Primary fuel valves	Semi-annually	Service Technician	Record primary fuel pressure
Secondary fuel valves	Semi-annually	Service Technician	Record secondary fuel pressure

PERIODIC TESTING RECOMMENDED CHECKLIST (CONTINUED)

ITEM	FREQUENCY	ACCOMPLISHED	REMARKS
Flame failure	Weekly	Operator	1. Shut down burner with "Burner On" switch in "off" position 2. Close the manual gas shutoff on both the primary and secondary valves 3. Initiate a burner cycle with both manual valves closed 4. Check that main flame failure occurs 5. If flame failure does not occur, cease operation of boiler and call service technician
Flame signal strength	Weekly	Operator	If flame meter is installed, log readings
Low water fuel cutoff and alarm	Daily/Weekly Semi-annually	Operator Operator	Refer to instructions. Perform a slow drain test in accordance with ASME Boiler and Pressure Vessel Code Section VI
High limit safety control	Annually	Service Technician	Refer to instructions
Operating control	Annually	Service Technician	Refer to instructions
Low draft, fan, air pressure, and damper position interlocks	Monthly	Operator	Refer to instructions
High and low gas pressure interlocks	Monthly	Operator	Refer to instructions
Fuel valve interlock switch, if applicable	Annually	Service Technician	Refer to instructions
Safety valves	As required	Operator	In accordance with procedure in Section VI of ASME Boiler and Pressure Vessel Code, Recommended Rules for Care and Operation of Heating Boilers
Inspect burner components	Semi-annually	Service Technician	Refer to instructions
Clean burner fan	Annually or as required	Operator	Remove buildup on fan blades
Auxiliary low gas pressure switch	Annually	Service Technician	Refer to instructions in Section VIII - "Final Commissioning For Burner" of this manual