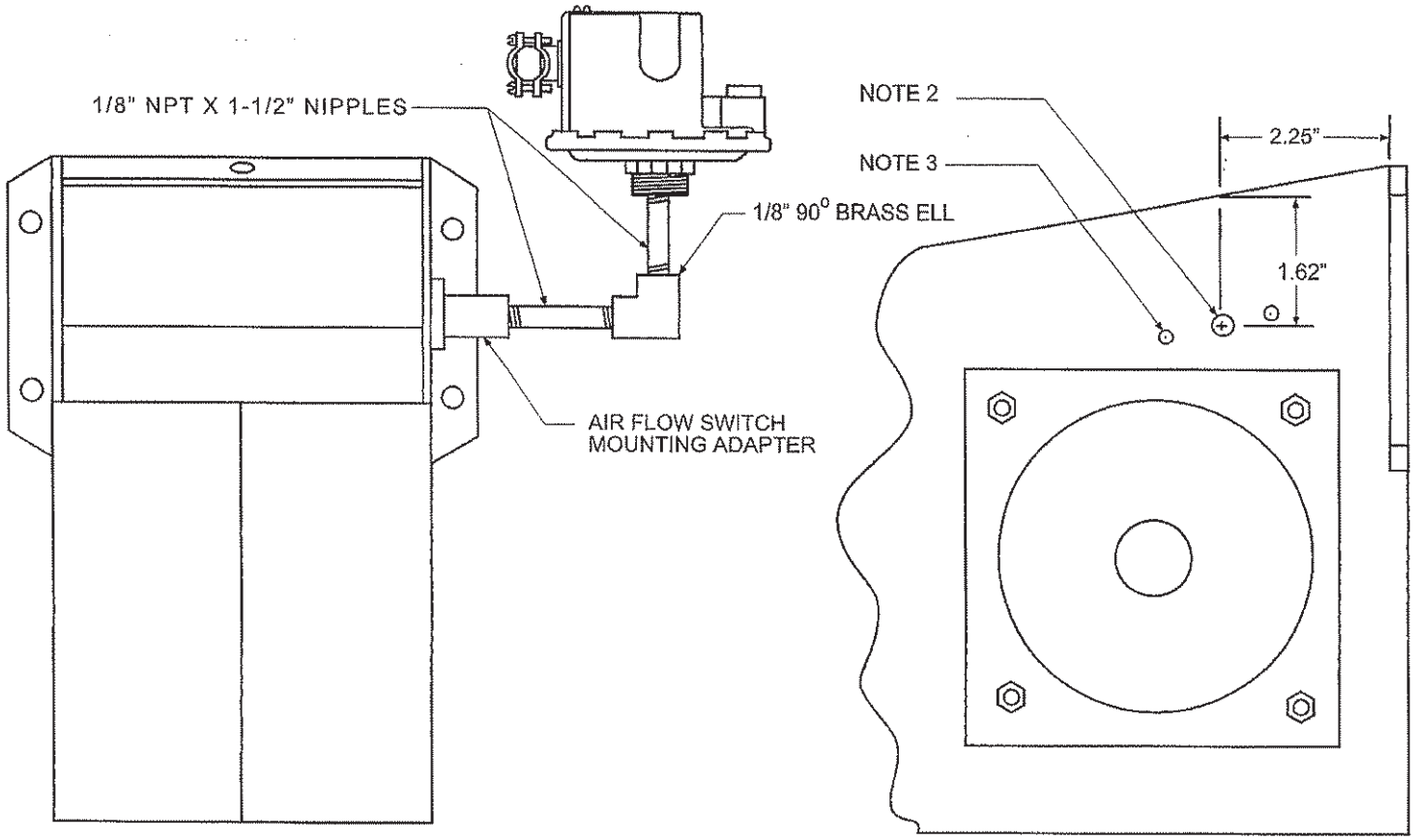

NOTES

1. Lift the top cover and remove the old sail switch. Plug the hole with the black nylon plug provided.
2. Drill (1) .375 dia. hole at location indicated.
3. Center the air flow switch mounting adapter over the .375 dia. hole and mark the location for the (2) mounting screws.
4. Reference the manufacturers installation and operation instruction sheet.

REV	ECN	CK	
			DIAPHRAGM AIR FLOW SWITCH CONVERSION KIT FOR MODEL "S4" BURNERS.
00			

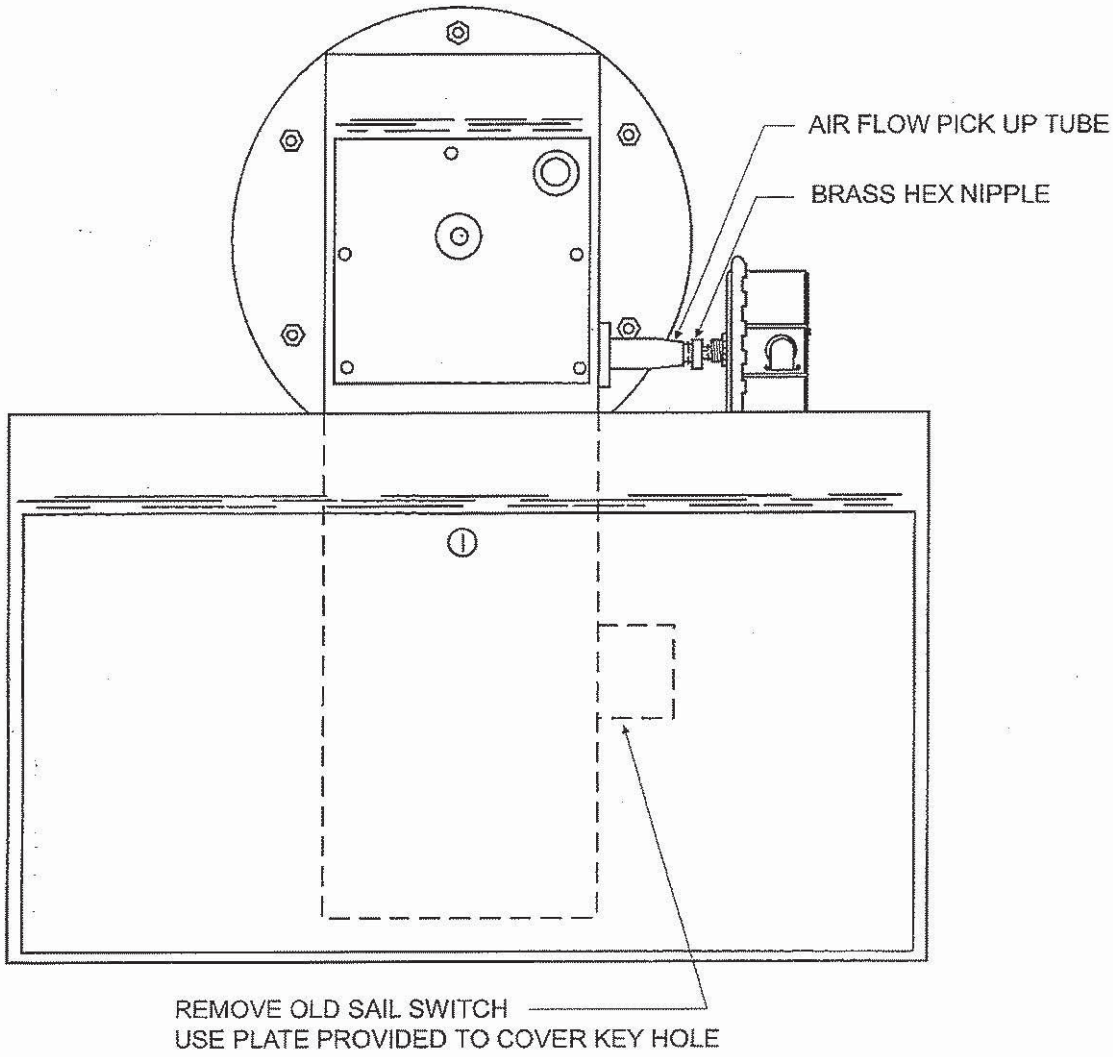

REV	ECN	CK	
			DIAPHRAGM AIR FLOW SWITCH CONVERSION KIT FOR ALL "S" BURNERS (EXCEPT "S4").
00			

NOTES

1. Mounting of the diaphragm air flow switch as illustrated is typical of all Model "R" burners with burner mounted control cabinets.
2. Burners with sub-panels and other arrangements will require alternate methods for diaphragm air flow switch mounting. Refer to manufacturers installation and operation instruction sheet.
3. When using the channel "U" bracket for mounting the switch; drill a .177 diameter hole for the 10-32 X 3/8" thread forming screws.

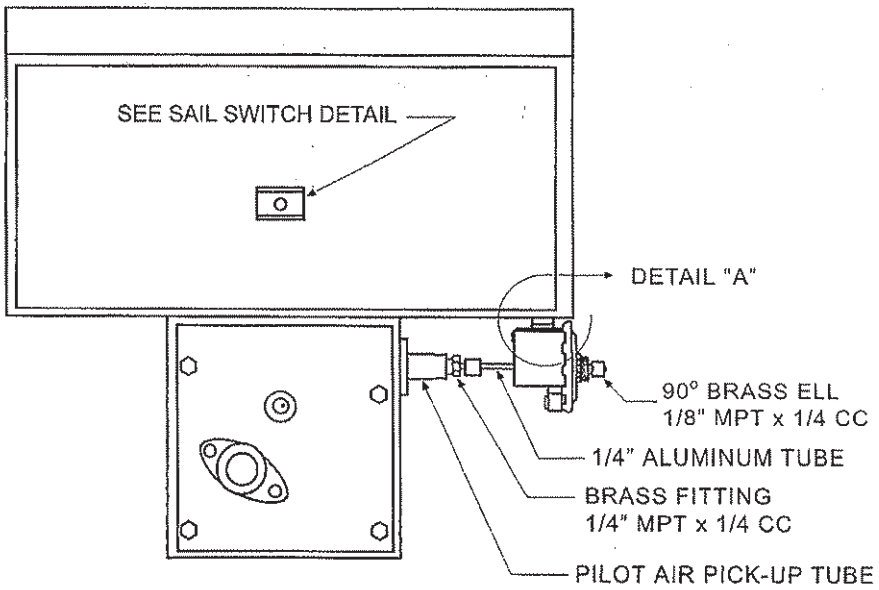

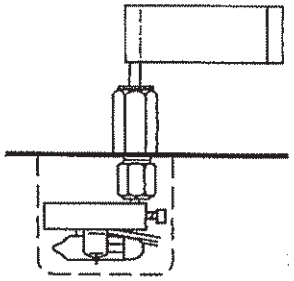

SAIL SWITCH DETAIL

REMOVE ELECTRIC MOTOR AND BLOWER WHEEL FOR ACCESS TO DISASSEMBLE THE SAIL SWITCH.
PLUG HOLE WITH BLACK NYLON PLUG AFTER REMOVAL.

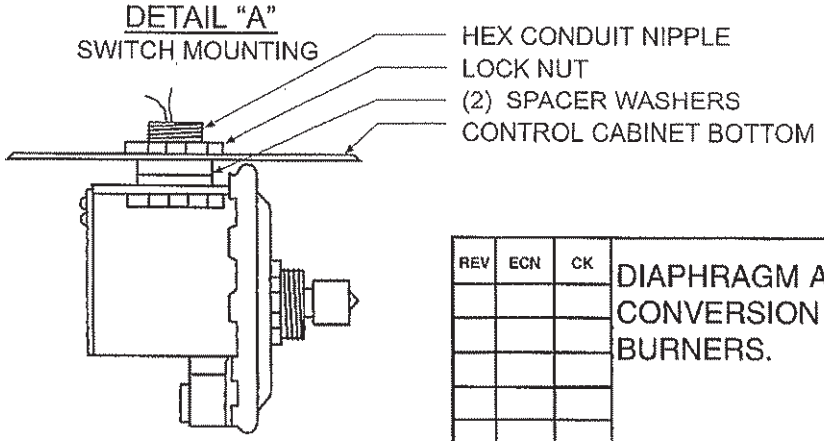

REV	ECN	CK
00		

DIAPHRAGM AIR FLOW SWITCH CONVERSION KIT FOR MODEL "R" BURNERS.

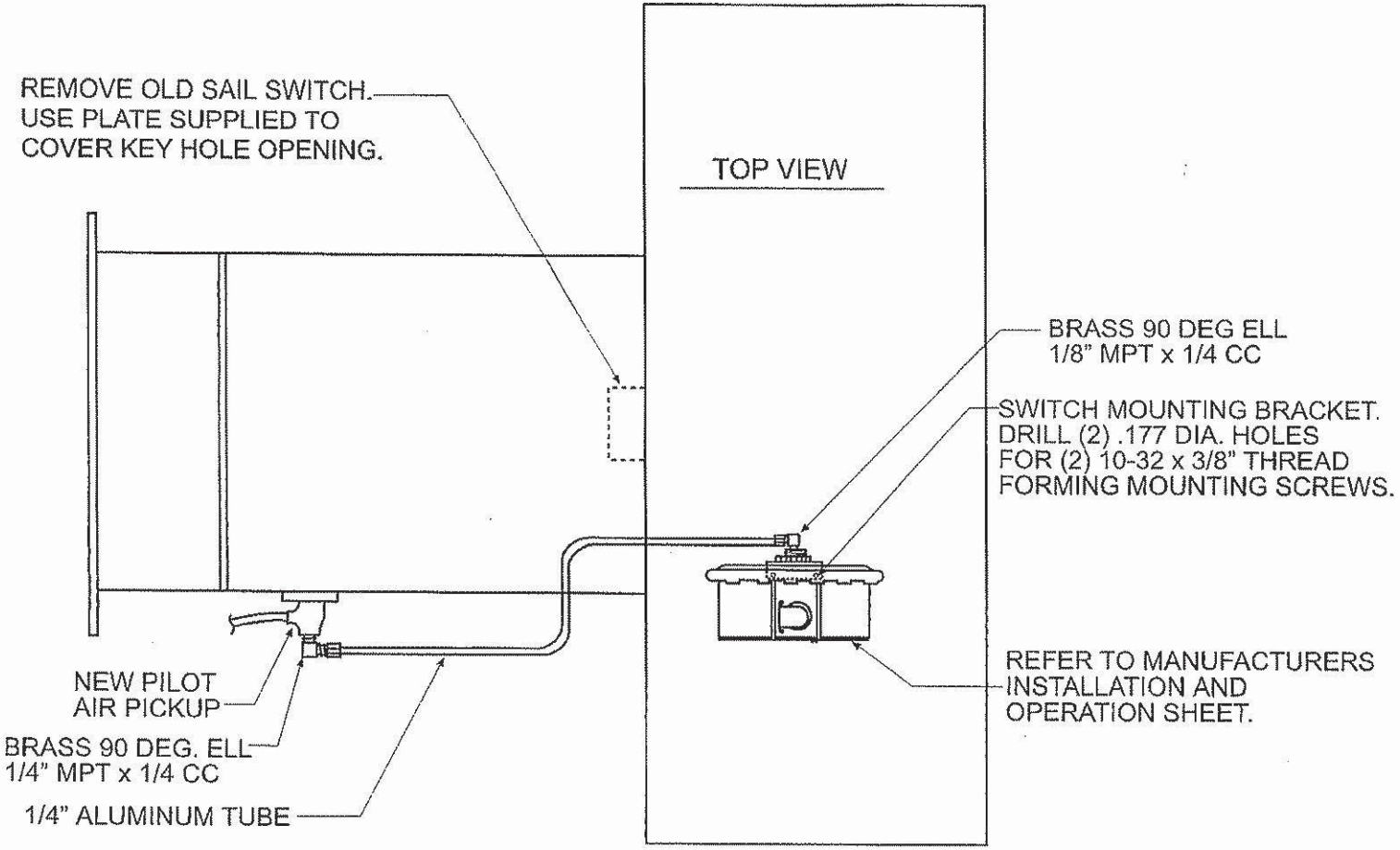

REV	ECN	CK
00		

DIAPHRAGM AIR FLOW SWITCH
CONVERSION KIT FOR MODEL "F"
BURNERS.

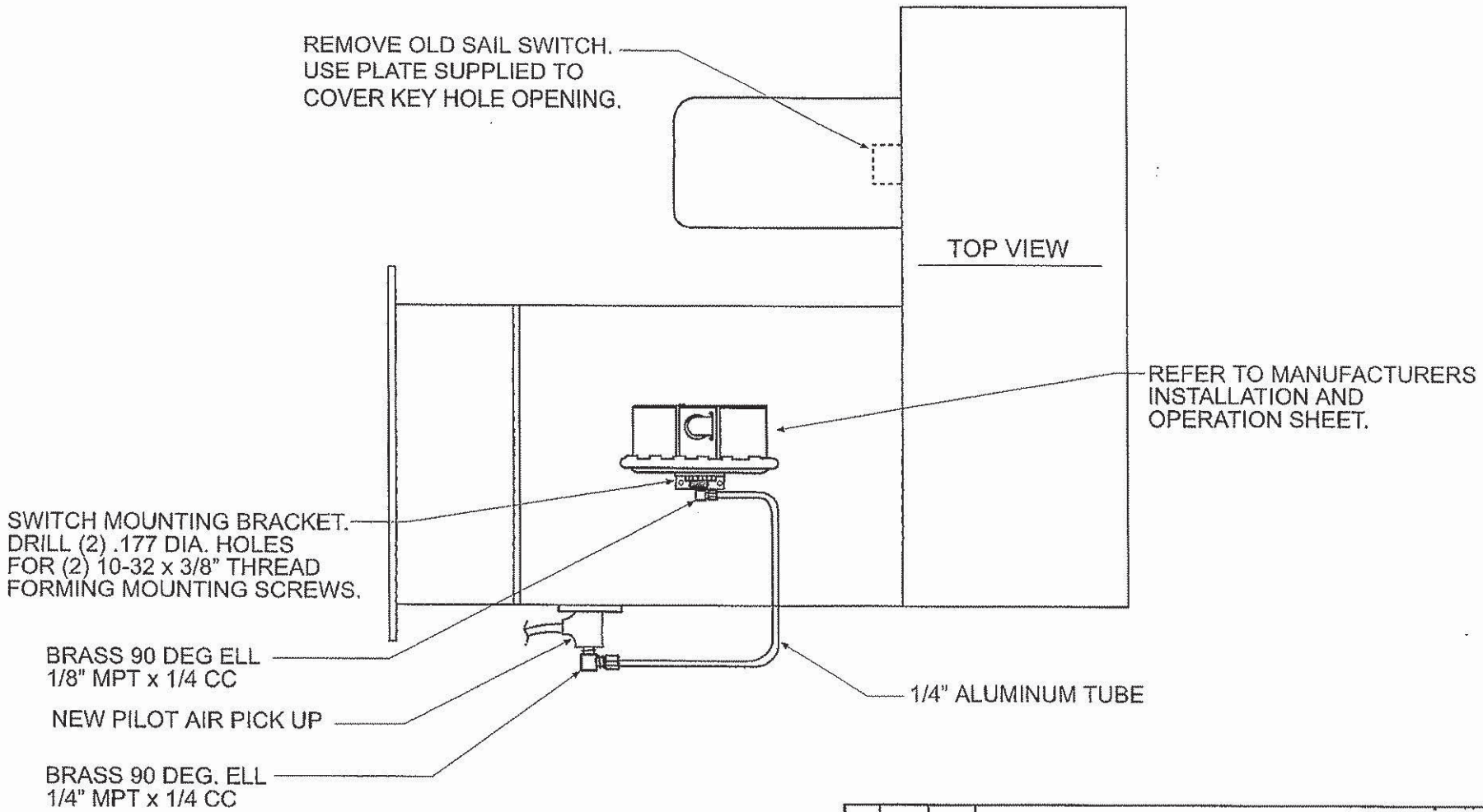

REV	ECN	CK
00		

DIAPHRAGM AIR FLOW SWITCH
CONVERSION KIT FOR MODEL "FL"
BURNERS.