NOTES

1. Mounting of the diaphragm air flow switch as illustrated is typical of all Model "R" burners with burner mounted control cabinets.
2. Burners with sub-panels and other arrangements will require alternate methods for diaphragm air flow switch mounting. Refer to manufacturers installation and operation instruction sheet.
3. When using the channel "U" bracket for mounting the switch; drill a .177 diameter hole for the 10-32 X 3/8" thread forming screws.

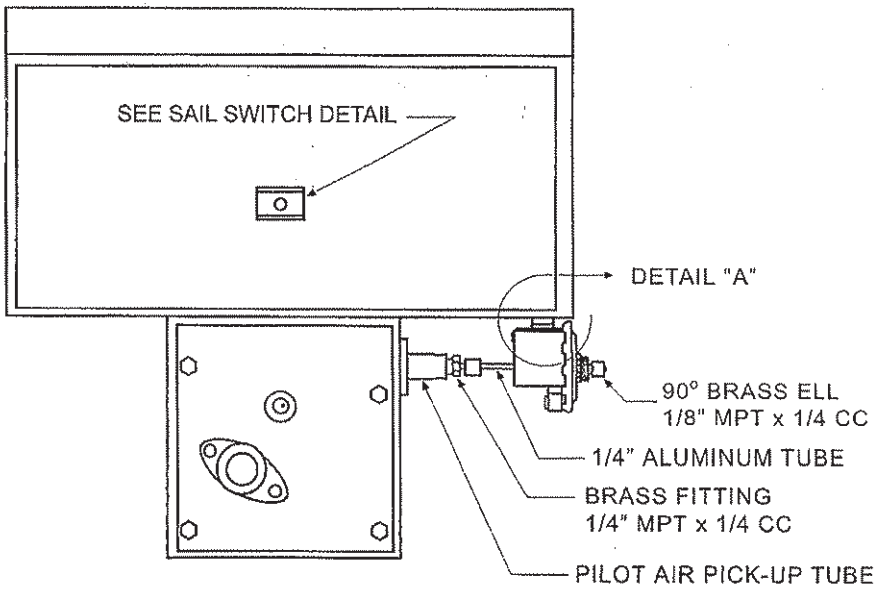

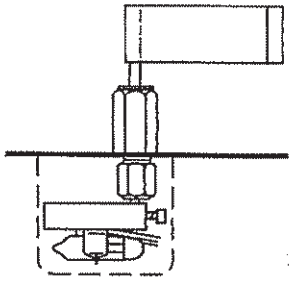

SAIL SWITCH DETAIL

REMOVE ELECTRIC MOTOR AND BLOWER WHEEL FOR ACCESS TO DISASSEMBLE THE SAIL SWITCH.
PLUG HOLE WITH BLACK NYLON PLUG AFTER REMOVAL.

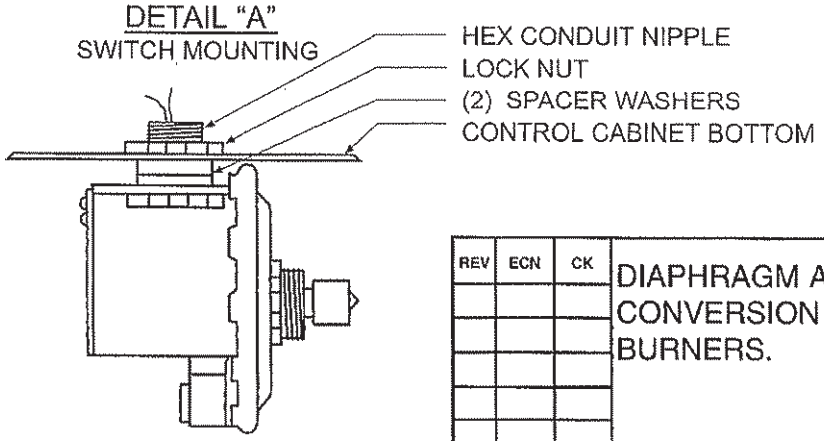

REV	ECN	CK
00		

DIAPHRAGM AIR FLOW SWITCH CONVERSION KIT FOR MODEL "R" BURNERS.